Installing Drapery and Panels

Overview

DECORATIVE ROD AND RINGS

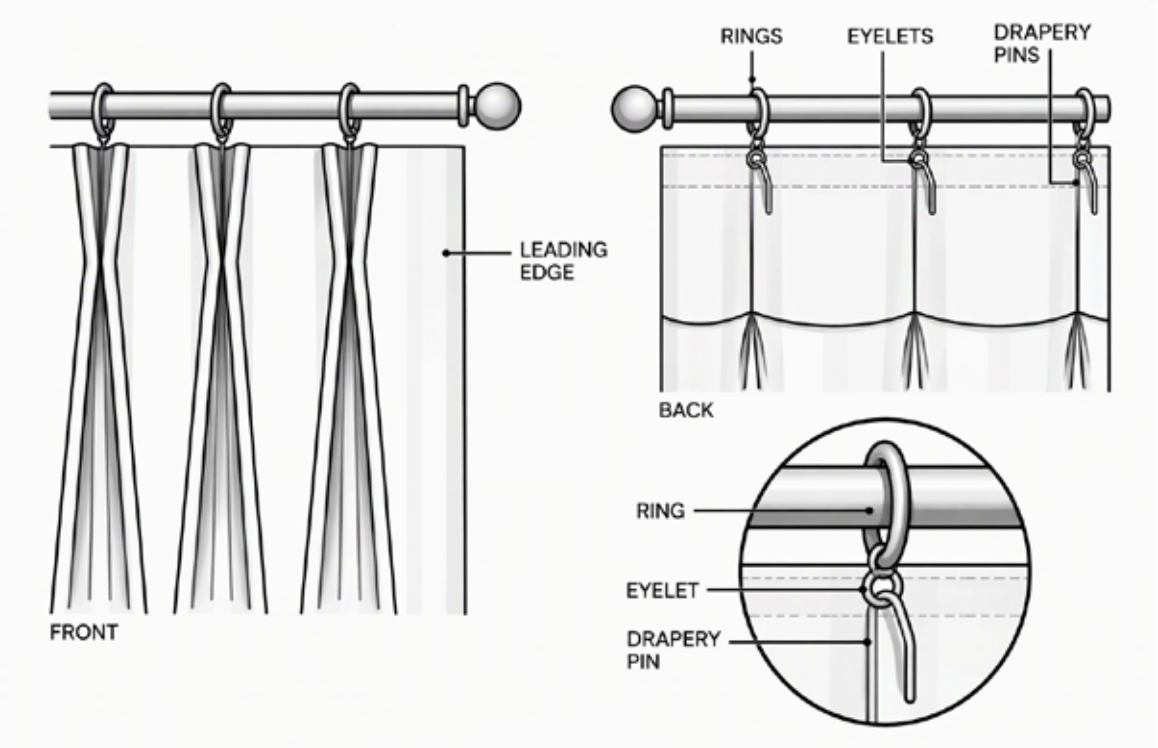

TRAVERSING DRAPERY TRACK

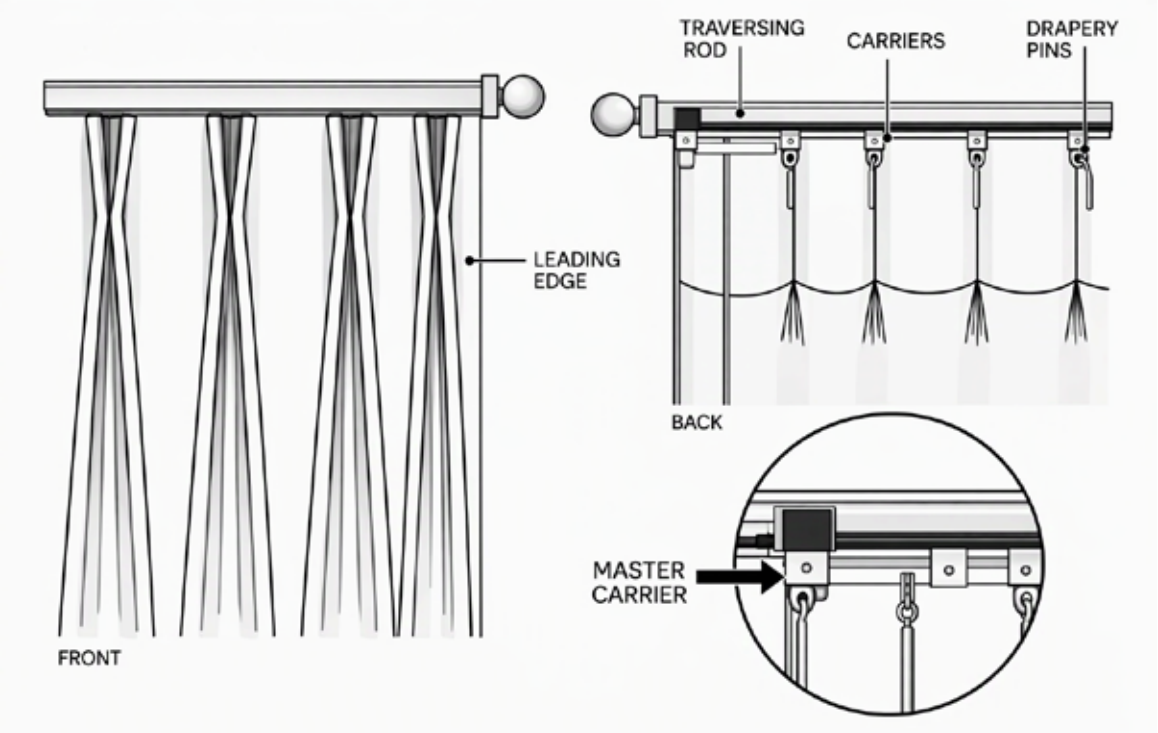

Pleated Drapery and Panels

With the drapery rod already installed according to the manufacturer's instructions, insert the drapery pins through the eyelets of the hardware rings/carriers.

Start at the leading edge of the drapery/panel and work toward the outside edge or return.

— When installing on a decorative rod with rings, the last ring on each end should be positioned to the outside of the end bracket.

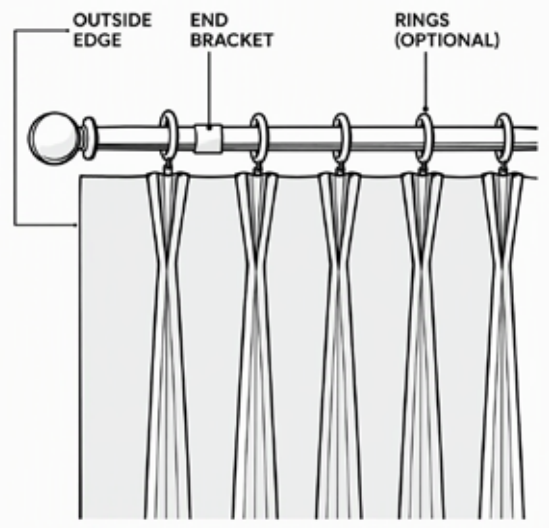

— When installing on a decorative rod with carriers, the first 2 pins go into the master carrier.

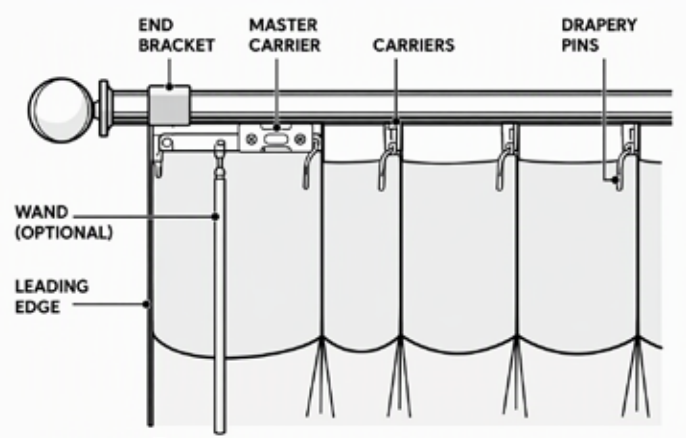

Drapery and Panels with Returns

The return is the flat fabric following the last pleat. For drapery/panels with a return, you will pin the last pleat to the final ring/carrier and the return will be attached to the screw eye provided. The screw eye should screw easily into drywall.

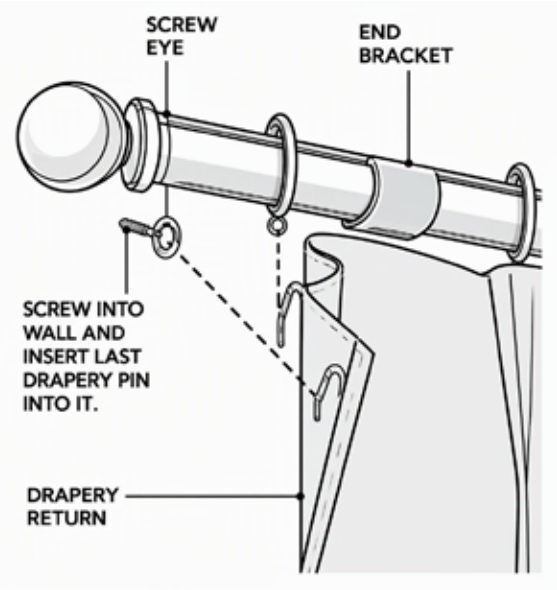

— The return allows for better light control and insulation, and limits seeing behind your drapery/panels from the side.

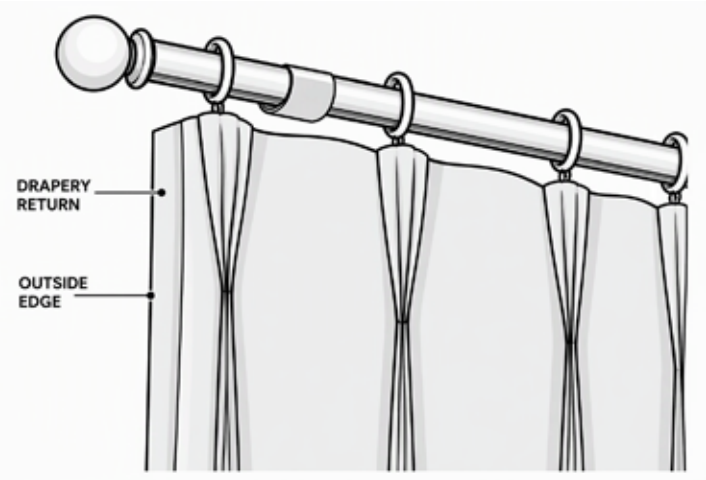

Breaking the Buckram

Now that your drapery/panels are hanging from the rings/carriers, you can style the header (top of the drapery or panel) by "breaking the buckram." This is the practice of creasing the buckram (the stiffener sewn into the drapery header). Breaking the buckram will allow the drapery/panels to stack properly and gain memory.

DECORATIVE RODS

— When the header hangs below the rod and the rod is visible, you will generally break the buckram to the back toward the wall or window.

— For double layers, break the buckram on the front drapery/panel to the front and on the back drapery/panel to the back to prevent them from rubbing against each other when operating.

— If there are obstructions like molding that the drapery/panels will rub against, then break the buckram toward the front.

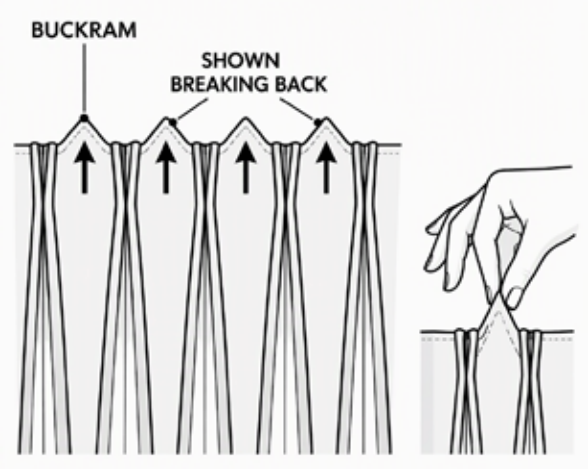

NON-DECORATIVE TRAVERSE RODS

— When the header sits up higher and covers the rod, you will break the buckram forward into the room.

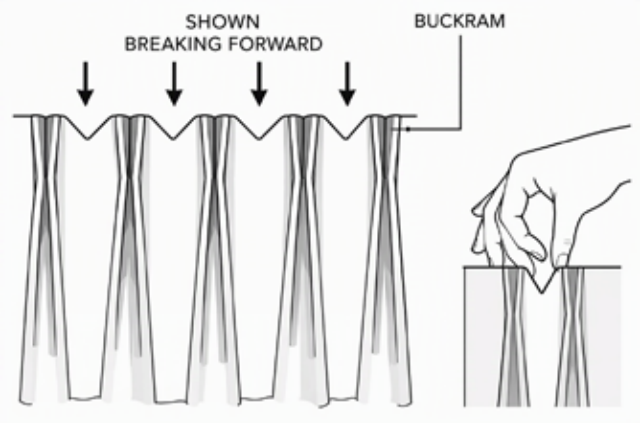

Additional Drapery and Panel Styles

GROMMET HEADING

— Drapery pins are not used with Grommet Heading drapery/panels.

— For Grommet Heading drapery/panels, gently arrange the header in an accordion fold ensuring that the fabric at each end returns toward the wall or window. Slide the grommets onto the drapery rod.

— The last grommet on each end should be positioned to the outside of the end bracket.

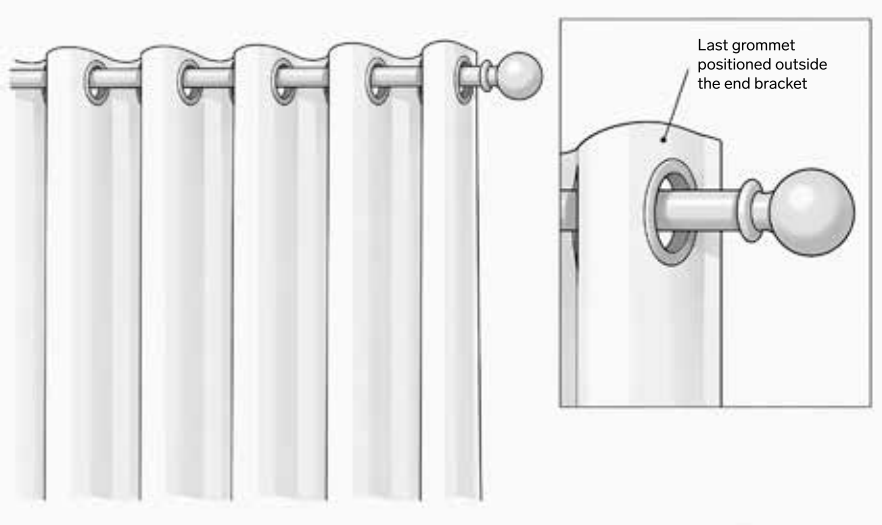

ROD POCKET HEADING

— Drapery pins are not used with Rod Pocket Heading drapery.

— For Rod Pocket drapery, gently insert the drapery rod through the pocket at the top of the drapery. Even out the gathering so that the draperies have a uniform appearance.

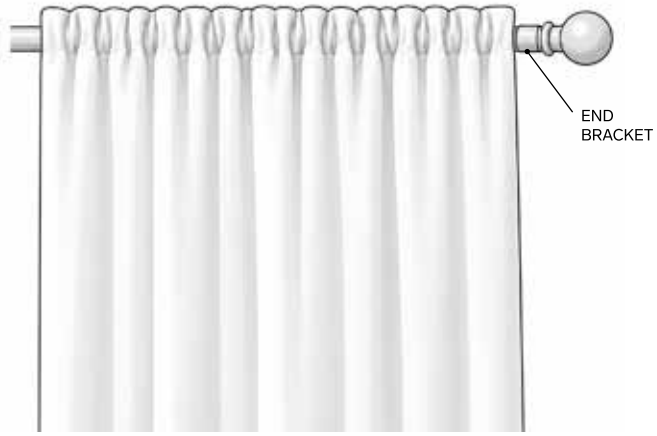

RIPPLEFOLD™ DRAPERY

— Please see our separate installation guide for this style of drapery.

Finishing Touches

DRESSING YOUR DRAPERY AND PANELS

Once the drapery/panels are installed, most wrinkles and folds will hang out on their own. If you have a steam appliance, you may apply a light steaming to ease out stubborn wrinkles or creases depending on your fabric selection.

There are some fabrics that should not be steamed, such as linen, rayon and moire type fabrics.

Note: Wrinkling may occur during transit.

SETTING THE PLEATS

To set pleats, open the drapery/panels completely making sure they are stacked neatly. Secure them in the open position with a strip of paper, string, or fabric, and leave them secured for 2-3 days . This will allow the pleats to set properly and gain memory.

