Custom Window Treatments

Installation Instructions

Before You Begin

Enclosed are your new Custom Window Treatment products. Before you attempt to install and hang them, please review the contents of this brochure. It will provide step-by-step procedures that will help you create the proper installation.

Prior to starting the installation, we recommend removing the treatments from the packaging. Be sure that you have a space for them to hang freely to allow any wrinkles to relax and begin to fall out. Keep them away from the area where they are to be installed, so that they cannot be soiled or damaged by tools, ladders, etc.

The next step should be to assemble all of the tools and fasteners that you will need.

Tools you will need:
— A sturdy ladder appropriate for your working height
— Electric Drill with various drill bits
— Screwdrivers
— Level
— 1/4″ Nut Driver
— Pencil

Screws or Fasteners you may need:
If you are installing directly into wall studs, the basic hex head screws included should be adequate. If you do not have a stud where you will be installing the screw, you will need to have the right fasteners to support the treatment, such as:
— Molly Bolts
— Toggle Bolts
— Wall Anchors

If you are installing into wallboard, metal, tile, or masonry, you will need fasteners appropriate for these materials.
If installing into metal, pre-drill the holes and use sheet metal screws. If installing into masonry or tile, you will need a special masonry drill bit.

Use the proper anchor plugs or special screws recommended by your hardware store. Follow the instructions carefully.

Check all of your hardware. If you have drapery rods, make certain that all of the pieces are on hand before you begin.

Always start by installing the hardware first, and checking to make sure it is secure and level. Follow any drapery rod instructions very carefully.

Thank you!

Thank you for purchasing this Custom Window Treatment! We hope you love your new product as much as we loved making it for you.

Installing Soft Shades

Outside Mount Soft Shades
Installation for Outside Mount Soft Shades follows the same process regardless of whether the shade is positioned off the front or the back of the headrail.

Please note: When positioned off the back of the headrail, extended brackets will be required for Reverse Fold Roman Shades or shades that are mounted over window trim. This allows space for those shades to move freely as they are raised and lowered. These are included.

The shade's headrail is pre-slotted along the center to accommodate New York style mounting brackets. The first step will be to install these brackets on the wall above the window.

Measure in approximately 4″ from each side of the shade and mark this distance on the wall, centered at least 2″ above the top of the window trim. Use your level to be sure the marks are even with each other. Install the brackets at these points using the two screws provided for each bracket.

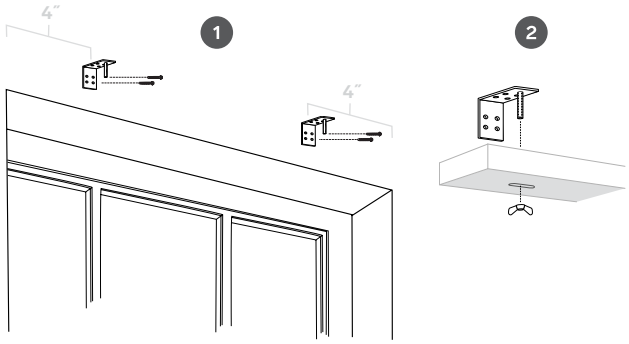

If you have a wide shade, you will need to install extra brackets to support it. These are included. Space the additional brackets equally along the width of the window opening, level with the end brackets.

Remove the wing nuts from the bracket studs. Slide the shade headrail slots up onto the bracket studs, making sure that the shade is centered on the window. With the bracket studs coming through the headrail slots, reinstall the wing nuts onto the studs and hand tighten to secure the shade.

Please see the next page for instructions on installing Inside Mount Soft Shades.

Inside Mount Soft Shades
Installation for Inside Mount Soft Shades follows the same process regardless of whether the shade is positioned off the front or the back of the headrail.

The shade's headrail is pre-slotted along the center to accommodate New York style ceiling mount brackets. The first step will be to install these brackets flat against the head of the window frame.

Measure in approximately 4″ from each window side jamb and mark these spots on the window frame. Use your level to be sure the marks are even with each other, and confirm that the distance to the window allows space for the shade to move freely as it is raised and lowered. Install the brackets at these points using the two screws provided for each bracket.

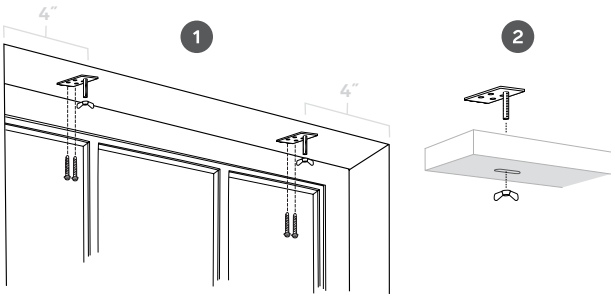

If you have a wide shade, you will need to install extra brackets to support it. These are included. Space the additional brackets equally along the width of the window opening, level with the end brackets.

Remove the wing nuts from the bracket studs. Slide the shade headrail slots up onto the bracket studs, making sure that the shade is centered on the window. With the bracket studs coming through the headrail slots, reinstall the wing nuts onto the studs and hand tighten to secure the shade.

Installing Draperies and Panels

With the drapery rod already installed according to the manufacturer's instructions, insert the drapery pins through the eyelets of the hardware rings/carriers. Start at the leading edge of the drapery/panel and work toward the outside edge or return.

When installing on a decorative rod with rings, the last ring on each end should be positioned to the outside of the end bracket.

When installing on a decorative rod with carriers, the first 2 pins go into the master carrier.

For drapery/panels with a return, you will pin the last pleat to the final ring/carrier and the return will be attached to the screw eye provided. The screw eye should screw easily into drywall.

Now that your drapery/panels are hanging from the rings/carriers, you can style the header by "breaking the buckram." This is the practice of creasing the stiffener sewn into the drapery header. Breaking the buckram will allow the drapery/panels to stack properly and gain memory.

When the header hangs below the rod and the rod is visible, you will generally break the buckram to the back toward the wall or window. If there are obstructions like molding that the drapery/panels will rub against, then break the buckram toward the front.

For double layers, break the buckram on the front drapery/panel to the front and on the back drapery/panel to the back to prevent them from rubbing against each other when operating.

When the header sits up higher and covers the rod, you will break the buckram forward into the room.

Grommet Heading:
Drapery pins are not used with Grommet Heading drapery/panels. For this style, gently arrange the header in an accordion fold ensuring that the fabric at each end returns toward the wall or window. Slide the grommets onto the drapery rod. The last grommet on each end should be positioned to the outside of the end bracket.

Rod Pocket Heading:
Drapery pins are not used with Rod Pocket Heading drapery. For this style, gently insert the drapery rod through the pocket at the top of the drapery. Even out the gathering so that the draperies have a uniform appearance.

Ripplefold™ Drapery:
Please see our separate installation guide for this style of drapery.

Once the drapery/panels are installed, most wrinkles and folds will hang out on their own. If you have a steam appliance, you may apply a light steaming to ease out stubborn wrinkles or creases. Do not steam moire type fabrics.

To set pleats, open the drapery/panels completely making sure they are stacked neatly. Using the tie back string provided, tie them in the open position and leave them tied for 2-3 days. This will allow the pleats to set properly and gain memory.

Installing Faux Romans

Outside Mount Faux Romans:
Measure in approximately 4″ from each side of the Faux Roman and mark these places on the back of the headrail, ensuring that the marks are even with each other.

Align the left slotted bracket on the outside of the mark on the left, then install a screw into the center of the bracket. Align the right slotted bracket on the outside of the mark on the right, then install a screw into the center of the bracket.

Measure in 3 1/4″ from each side of the Faux Roman and mark this distance on the wall, centered at least 2″ above the top of the window trim. Use your level to be sure the marks are even with each other. Install the 1 1/2″ screws at these points using the screws provided.

If you have a wide Faux Roman, you will need to install extra brackets to support it. These are included. Space the additional brackets equally along the width of the window opening, level with the end brackets.

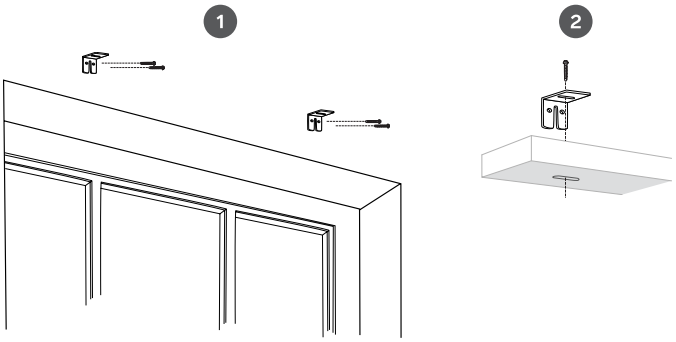

Inside Mount Faux Romans:
The Faux Roman headrail is pre-drilled for direct mount to the window frame using the 3″ screws provided. Before installing, make sure that both sides of the Faux Roman are the same distance from the window.

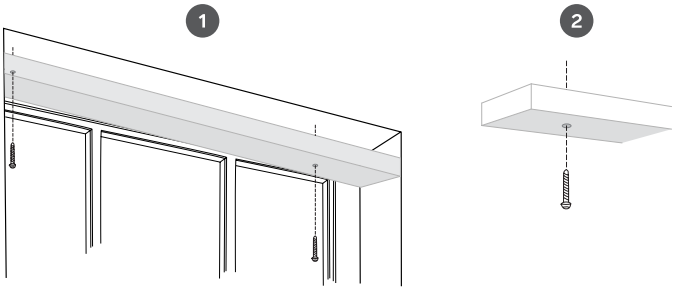

Installing Top Treatments

The first step is to position the mounting brackets (angle irons) in their proper locations. Depending upon the size of the treatment, you may need several brackets. Always use all of the brackets included.

The treatment will fit over the brackets that you install.

Locate the height that you will install the treatment. Measure the width of the treatment and mark that width on the wall, one mark at each end. Use a level to make sure that the marks are even.

Measure in about 3″ to 4″ from each end. Install brackets at each location. Make sure that the brackets will not interfere with the installation of any drapery hardware that may be mounted under the top treatment. Install additional brackets as needed to support the treatment, making sure that all brackets are level with each other.

Place the top treatment over the brackets. Secure the top board with the short screws provided. Use all of the screws. Each hole in the bracket should have a screw.